Features & Typical applications:

Dielectric metallized polypropylene film

Small size, with mono construction

Severe ambient conditions

Excellent active and passive flame resistant abilities

Widely used in across-the-line, interference suppression circuit

For connections in series with the mains

Capacitive power supply

Energy meters

Specifications

Reference Standard	GB/T 6346.14 (IEC 60384-14)			
Climatic Category	40/110/56/B			
Operating Temperature Range	-40°C ～ +110°C			
Rated Voltage	310 VAC			
Capacitance Range	0.1μF ~ 10.0 μF			
Capacitance Tolerance	±10%(K) ±20%(M)			
Voltage Proof	1.6 V_R (5s)			
Dissipation Factor	≦0.1% (1KHz, 20℃)			
If the working voltage(V) is lower than the rated voltage(V_R), the capacitor can be worked at a higher dv/dt. In this case, the maximum allowed dv/dt is obtain by multiplying the right value with V_R/V.	dv/dt			
	P=15.0	P=22.5	P=27.5	P=37.5
	300	180	120	100

Type：MPX-B Specification	Part Numbering System

1	2	3	4	5	6	7	8	9	10	11	12	13	14	15	16	17	18	19	20

Series Code
Capacitance
Tolerance
Rated Voltage
Lead Style
Lead pitch
Lead length
Special code
product type

Digit 1~3	Type	MPX											
Digit 4~6	Digit 5~6 indicate the first two figures of the capacitance value and the 7th digit indicate the number of zero added to obtain the rated capacitance in pF. EX.102=1000pF=1nF=0.001μF												
Digit 7	Code	F		G		H		J		K		M	
	Tolerance	±1%		±2%		±3%		±5%		±10%		±20%	
Digit 8~9		A	B	C	D	E	F	G	H	J	K	L	M
	1				20				50	63			1100
	2	100	125	160	200	250	15	400	500	630	800	120	
	3	1000	1250	160	2000	2500	3150	4000	5000	6300	8000	1200	1400
		N	P	Q	R	S	T	U	V	W	X	Y	
	1		240	300	330	440	540	600	700	850	900		
	2	150	275	305	350	450	520		760	1800			
	3	1500	280	310		480	550					3000	
	Letter and then number indicate AC, but number and then Letter indicate DC. EX.2A=100VDC A2=100VAC												
Digit 10	Code	A	B	C	D	X							
	Lead style	Straight lead	Kink-Cutted	Inward forming	outward forming	straight lead Cutted							
	Code	E	S	T	F	G							
	Lead style	Taping (Ammo) (直腳 TP,P0=12.7mm)	Kink-Cutted (special)	Taping (Ammo) (同等彎 TP)	Taping (Ammo) (內彎 TP)	Taping (Ammo) (外彎 TP)							
Digit 11~12	Code	P2	P3	P4	P5	P6	P8	P9	PA	PB	PC	PD	PE
	Pitch	3.5	4.0	4.5	5.0	6.0	7.0	7.5	8.0	9.0	10.	31.0	15.0
	Code	PF	PG	PH	PJ	PK	PL	PM	PN	PP	PQ	PR	PS
	Pitch	20.0	21.0	22.0	22.5	28.5	52.5	27.5	30.0	32.5	41.	12.5	17.5
	Code	PT	PU	PV	PW	PX	PY	PZ	PO				
	Pitch	51.0	27.0	37.5	25.0	12.0	35.0	16.0	Axial				
Digit 13~14	Code	L1*	L2	L3	L4	L5	L6	L7*	L8	L9	LA	LB	LC
	Length	15.0	3.5	4.0	4.5	10.0	15.0	20.0	TP	2.7	8.0	5.0	6.0
	Code	LD*	LE	LF	LG	LH	LJ*	LK	LL	LM	LN	LP	LQ*
	Length	26.0	7.5	5.5	12.0	7.0	25.0	13.0	6.5	3.0	9.0	2.5	17.0
	Code	LR	LS*	LU*	LW*	LX	LY*	LZ*	LV	L0*	LT*	VL*	
	Length	3.8	24.0	27.0	40.0	16.0	30.0	32.0	3.2	Axial	22	33	

Notes: * Straight,length is minimum

Digit 15~16	Code	Explanation	Code	Explanation	Code	Explanation
	CT	The different size(T)	CH	The different size(H)	ZT	The different color, The different size (T) & 0.6mm
	HH	HF, The different size(H)	HD	HF, The different size(T)	ZU	The different color & The different size (H) & 0.6mm
Digit 17~18	Special Number.					
Digit19	MPX Series. 〝B〞:85℃,85%RH,275VAC,1000H.					

Type：MPX-B Specification	Dimension

unit:mm

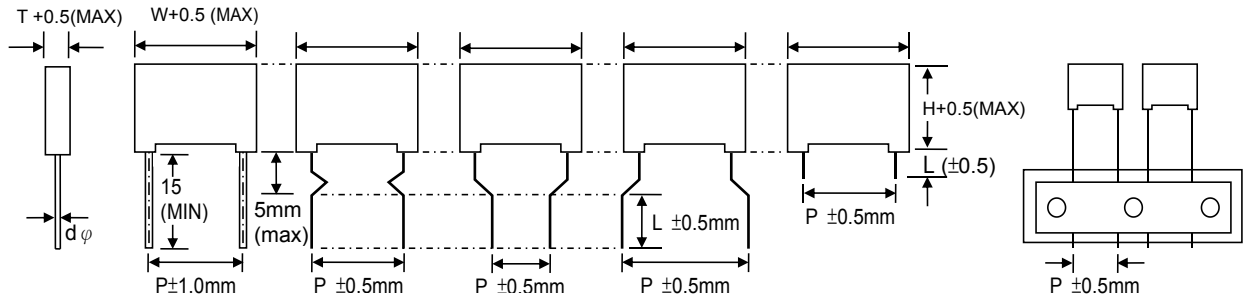

[FIG1] [FIG2] [FIG3] [FIG4] [FIG5] [Taping]

CAP. (uF)	VOLT. (VAC)	TOL. ±%	Dimension unit:mm					SCC P/N
			W	H	T	P	dφ ±0.05	
0.10	310	10	18.0	11.0	5.0	15.0	0.6	MPX104KQ3*PE**ZT03#
0.12	310	10	18.0	12.0	6.0	15.0	0.6	MPX124KQ3*PE**ZT05#
0.15	310	10	18.0	12.0	6.0	15.0	0.6	MPX154KQ3*PE**ZT05#
0.18	310	10	18.0	13.0	7.0	15.0	0.8	MPX184KQ3*PE**CT08#
0.22	310	10	18.0	13.5	7.5	15.0	0.8	MPX224KQ3*PE**CT09#
0.27	310	10	18.0	14.5	8.5	15.0	0.8	MPX274KQ3*PE**CT12#
0.33	310	10	18.0	15.0	9.0	15.0	0.8	MPX334KQ3*PE**CT14#
0.39	310	10	18.0	16.0	10.0	15.0	0.8	MPX394KQ3*PE**CT16#
0.47	310	10	18.0	18.5	11.0	15.0	0.8	MPX474KQ3*PE**CT18#
0.56	310	10	18.0	19.2	11.2	15.0	0.8	MPX564KQ3*PE**CT19#
0.68	310	10	18.0	21.0	12.0	15.0	0.8	MPX684KQ3*PE**CT23#
0.47	310	10	26.5	16.5	7.5	22.5	0.8	MPX474KQ3*PJ**CT09#
0.56	310	10	26.5	16.5	8.5	22.5	0.8	MPX564KQ3*PJ**CT12#
0.68	310	10	26.5	19.0	10.0	22.5	0.8	MPX684KQ3*PJ**CT16#
0.82	310	10	26.5	19.0	10.0	22.5	0.8	MPX824KQ3*PJ**CT16#
1.0	310	10	26.5	20.0	11.0	22.5	0.8	MPX105KQ3*PJ**CT18#
1.2	310	10	26.5	21.5	12.0	22.5	0.8	MPX125KQ3*PJ**CT23#
1.5	310	10	26.5	24.0	13.5	22.5	0.8	MPX155KQ3*PJ**CT21#
1.8	310	10	26.5	25.0	16.0	22.5	0.8	MPX185KQ3*PJ**CT32#
2.2	310	10	26.5	29.5	14.5	22.5	0.8	MPX225KQ3*PJ**CT49#
2.2	310	10	26.5	25.0	16.5	22.5	0.8	MPX225KQ3*PJ**CT50#
1.0	310	10	32.0	18.5	10.0	27.5	0.8	MPX105KQ3*PM**CT16#
1.2	310	10	32.0	20.0	11.0	27.5	0.8	MPX125KQ3*PM**CT18#

Type： MPX-B Specification	Dimension

unit:mm

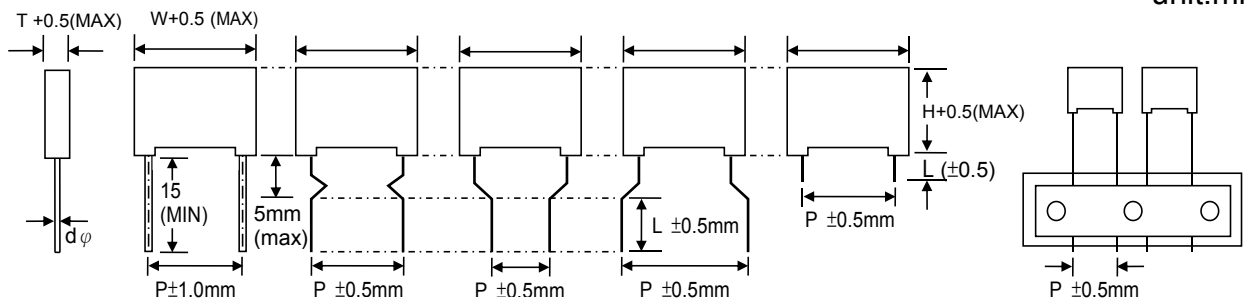

[FIG1] [FIG2] [FIG3] [FIG4] [FIG5] [Taping]

CAP. (uF)	VOLT. (VAC)	TOL. ±%	Dimension unit:mm					SCC P/N
			W	H	T	P	dφ ±0.05	
1.5	310	10	32.0	22.0	13.0	27.5	0.8	MPX155KQ3*PM**CT20#
1.8	310	10	32.0	23.4	14.0	27.5	0.8	MPX185KQ3*PM**CT24#
2.2	310	10	32.0	24.5	15.0	27.5	0.8	MPX225KQ3*PM**CT36#
2.7	310	10	32.0	26.0	18.0	27.5	0.8	MPX275KQ3*PM**CT25#
3.3	310	10	32.0	30.0	18.0	27.5	0.8	MPX335KQ3*PM**CH21#
3.9	310	10	32.0	30.5	20.0	27.5	0.8	MPX395KQ3*PM**CT38#
4.7	310	10	32.0	31.0	22.0	27.5	0.8	MPX475KQ3*PM**CT45#
3.3	310	10	42.5	26.0	14.5	37.5	1.0	MPX335KQ3*PV**CT49#
3.9	310	10	42.5	28.5	16.0	37.5	1.0	MPX395KQ3*PV**CT32#
4.7	310	10	42.5	30.0	17.0	37.5	1.0	MPX475KQ3*PV**CT40#
5.6	310	10	42.5	31.5	18.5	37.5	1.0	MPX565KQ3*PV**CT37#
6.8	310	10	42.5	36.0	19.0	37.5	1.0	MPX685KQ3*PV**CT52#
8.2	310	10	42.5	37.0	22.0	37.5	1.0	MPX825KQ3*PV**CT45#
10.0	310	10	42.5	37.0	28.0	37.5	1.0	MPX106KQ3*PV**CT62#

Type：MPX-B Specification	Marking and lead forming

Marking

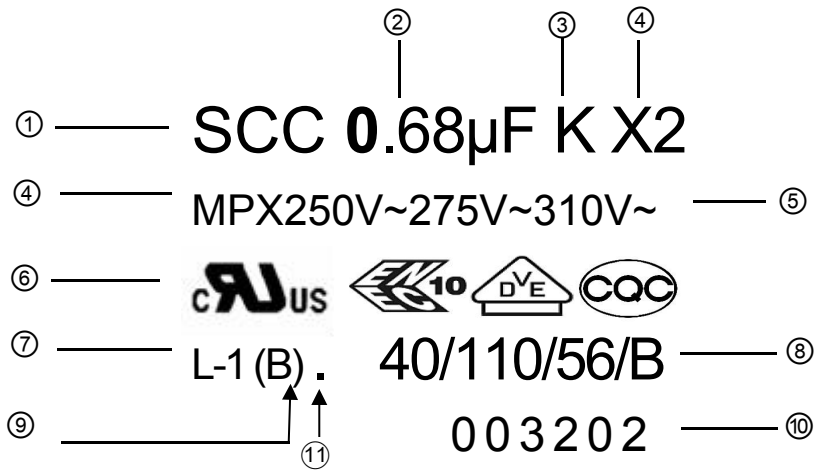

① **Company Logo**: SCC
② **Rated Capacitance**
③ **Capacitance Tolerance**
④ **Part Name**
⑤ **Rated Voltage**
⑥ **Safety Standard Approval Logo**
⑦ **Date Code: Year- Month**

Year	Code	Year	Code
2008/2020	A	2014/2026	G
2009/2021	B	2015/2027	H
2010/2022	C	2016/2028	J
2011/2023	D	2017/2029	K
2012/2024	E	2018/2030	L
2013/2025	F	2019/2031	M

Month	Code	Month	Code
1	1	7	7
2	2	8	8
3	3	9	9
4	4	10	O
5	5	11	N
6	6	12	S

⑧ **Operating temperature:-40~+110℃ Experiment for 56days.**
Flame retardant grade B
⑨ **Internal use**
⑩ **Production batch number**
⑪ **Manufacturer code : “. " : Huizhou SCC “: " : HuaiAn SCC**

年份周期 12 年一個輪迴, 如 CODE:A, 代表:2008 年, 2020 年, 2032 年, 2044 年…
CODE:B, 代表:2009 年, 2021 年, 2033 年, 2045 年…

Construction

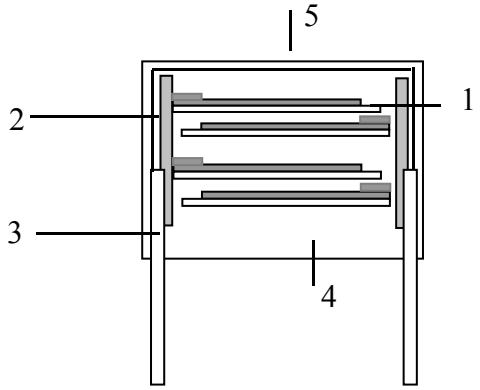

1. Metallized polypropylene film(ZN/AL)
2. Metal spray(Zn+ Tin/Zn)
3. Lead wire
4. Epoxy resin coating(UL94V-0、B)
5. Case-PBT(UL94V-0、B)

Type： MPX-B Specification			Electrical Characteristics		
No	項　目 Item		性　能 Performance	條　件 Test Conditions	參考標准 Reference Standard
1	使用溫度範圍 Operating Temperature Range		-40°C ～ +110°C		IEC 60384-14 2.1.1
2	額定電壓 Rated Voltage		310VAC（50/60Hz） 630VDC(Max)		IEC 60384-14 2.2.3
3	耐電壓 Withstand Voltage	端子間 Between Terminals	無 Short 現象.	VR x 430% (VDC) 60 sec, Charge and Discharge current shall not exceed 10 mA	IEC 60384-14 4.2.1
		端子外裝間 Between Terminals & Enclosure		2120 VAC 1 min	
4	絕緣阻抗 Insulation Resistance		C≦0.33μF:15,000MΩ min C>0.33μF:5,000MΩ*μF min	Charge time: 60 ±5sec. Charge voltage: 100VDC Test Temp: 20°C	IEC 60384-14 4.2.5
5	靜電容量 Capacitance		於指定範圍內 Within specified tolerance	at 1 KHz ±10% Measure voltage at 1 Vrms Test temp: 20°C	IEC 60384-14 4.2.2
6	散逸因數 Dissipation Factor		0.1 %max at 1KHz	Measure voltage at 1 Vrms Test temp: 20°C	IEC 60384-14 4.2.3
7	端子強度 Terminal Strength	抗拉強度 Pull Strength	端子不鬆斷 No cutting or slack of terminals	Wire diameter: 0.6&0.8mm Load: 1 kg, time: 10 sec. Wire diameter: 1.0 mm Load: 2 kg, time: 20 sec.	IEC 60384-14 4.3
		扭轉強度 Bending Strength		Wire diameter:0.6&0.8 mm 1.0&1.2 mm 90° x 4 time	
8	焊錫附著性 Solder ability		導線浸入後的表面至少需附著95%的新焊錫 At least 95% of the surface of the lead wire dipped into is covered with new solder.	Solder temp: 245℃ ±5°C Immersion time: 2±0.5sec. Solder: SnAgCu (Sn:96.5% Ag:3% Cu:0.5%)	IEC 60384-14 4.5
9	焊錫耐熱性 Resistance to Soldering heat	外觀 Appearance	無明顯異常 No abnormality on appearance	Solder temp: 265 ±5°C Immersion time: 10±0.5sec.	IEC 60384-14 4.4
		耐電壓 Withstand Voltage	依項目 3 Comply with item 3		
		靜電容量變化率 Capacitance Change	△C/C≦±3% Within ±3%		
		散逸因數 Dissipation Factor	於項目 7 範圍以內 Within spec of item 7 above.		
		絕緣阻抗 Insulation Resistance	Same as the spec of item 5 above		

Type： MPX-B Specification				Electrical Characteristics	
No	項 目 Item		性 能 Performance	條 件 Remark	參考標准 Reference Standard
10	耐 震 性 Vibration Proof		無 明 顯 異 常 No abnormality of the appearance	Frequency range 10-55-10-55 Hz Amplitude: 0.75 mm, 2 hrs/direction for 3 directions	IEC 60384-14 4.7
11	充放電 Charging and discharging	靜電容量變化率 Capacitance Change	△C/ C≦±5%(relative to the initial value)	Times:10 000 Duration of charging:0.5s Duration of discharging : 0.5s Charging voltage: rated voltage Charging resistance:220/CR(Ω) Discharging resistance: R=10/ CR(Ω) or 20(whichever is the greater) CR: rated capacitance (μF)	IEC 60384-14 4.15
		散逸因數變化量 Dissipation Factor Change	Increase of: △DF≦0.5% (1KHZ)		
		絕 緣 阻 抗 Insulation Resistance	IR:≧50%of rated value		
12	耐 寒 性 Cold Resistance	靜電容量變化率 Capacitance Change	△C/C≦±5% Within ±5%	Temperature: -40 ±2°C Duration: 96±4 hrs	IEC 60384-14 4.11.4
13	耐 熱 性 Dry Heat Resistance	絕 緣 阻 抗 Insulation Resistance	50% of minimum specified value	Temperature: +110 ±2°C Duration: 96±4 hrs	IEC 60384-14 4.11.2
		靜電容量變化率 Capacitance Change	△C/C≦±5% Within ±5%		
14	溫度循環 Temperature Cycle	外 觀 Appearance	無 明 顯 異 常 No abnormality on appearance	Total: 5 cycle Step / Temp / Time 1 / -40±2°C / 30 ±1min 2 / +25±2°C / 3min max 3 / +110±2°C / 30 ±1min 4 / +25±2°C / 3min max	IEC 60384-14 4.6
		耐 電 壓 Withstand Voltage	依 項 目 3 Comply with item 3		
		絕 緣 阻 抗 Insulation Resistance	50% of minimum specified value		
		靜電容量變化率 Capacitance Change	△C/C≦±5% Within ±5%		
15	穩態濕熱試驗 Damp heat , Steady state	外 觀 Appearance	無 明 顯 異 常 No abnormality on appearance 印 字 可 辨 識 Marking to be legible	Humidity: 90~95% RH Temperature: +40 ±2°C Duration: 56Days +48/-0hrs Measure after exposing at normal state for 1.5±0.5hrs.	IEC 60384-14 4.12
		耐 電 壓 Withstand Voltage	依 項 目 3 Comply with item 3		
		絕 緣 阻 抗 Insulation Resistance	50% of minimum specified value		
		靜電容量變化率 Capacitance Change	△C/C≦±5% Within ±5%		
		散逸因數變化量 Dissipation Factor Change	△DF≦0.8% at 10KHz, C≦1.0μF △DF≦0.5% at 1KHz ,C >1.0μF (20°C)		

Type ： MPX-B Specification				Electrical Characteristics	
No	項　目 Item		性　能 Performance	條　件 Remark	參考標准 Reference Standard
16	阻燃性測試 Flammability test		1.每次火焰燃燒后每一試片的燃燒秒數不可超過 10S. Maximum flaming time per specimen per flame application:10 sec. 2.五個試片,兩次火焰燃燒的試片總燃燒秒數不能超過 50S. Maximum total flaming time ,5 specimens,2 ignitions: 50 sec. 3.每一試片最長的燃燒秒數不能超過 30S. Maximum after glow time, Per specimen: 30sec.	1.試樣數目:5PCS, Number of specimens : 5pcs 2.火焰燃燒次數:2 Number of ignitions: 2 3.火焰不可燃燒到被夾子固定之上端. Combustion flame cannot be fixed to the upper end of the clip.	UL94
17	高濕/负荷试驗 Humidity Bias Test	外　觀 Appearance	無 明 顯 異 常 No abnormality on appearance	Humidity: 90~95% RH Temperature: +40 ±2°C Voltage : V_R Duration: 1000+24/-0hrs	AEC-Q200
		靜電容量變化率 Capacitance Change	△C/C≦±10% Within ±10%		
18	高溫/高濕/負荷測試 Humidity Bias Test	耐　電　壓 Withstand Voltage	依 項 目 3 Comply with item 3	Humidity: 85%±2 RH Temperature: 85±2℃ Duration: 1000±24hrs Applied Voltage 275 VAC Measure after exposing at normal state for 4 hrs	IEC 60384-14
		絕 緣 阻 抗 Insulation Resistance	50% of minimum specified value		
		靜電容量變化率 Capacitance Change	△C/C≦±10% Within ±10%		
		散逸因數變化量 Dissipation Factor Change	△DF≦ 2.4%, C≦1.0μF △DF≦ 1.5% ,C >1.0μF at 1KHz (20°C)		
19	高溫負荷 Endurance Test	外　觀 Appearance	無 明 顯 異 常 No abnormality on appearance 印 字 可 辨 識 Marking to be legible	Temperature: +110 ±2°C Duration:1,000 +48/-0 hrs Applied Voltage 125% x V_R through series resistor of 47Ω±5% to the Capacitor Measure after exposing at normal state for 4 hrs.	IEC 60384-14 4.14
		耐　電　壓 Withstand Voltage	依 項 目 3 Comply with item 3		
		絕 緣 阻 抗 Insulation Resistance	50% of minimum specified value		
		靜電容量變化率 Capacitance Change	△C/C≦±10% Within ±10%		
		散逸因數變化量 Dissipation Factor Change	△DF≦ 0.8%at 10KHz, C≦1.0μF △DF≦0.5%at 1KHz ,C >1.0μF (20°C)		

1. This capacitor is limited to ≦310VAC (Frequency≦100Hz) or ≦630VDC.
   此系列電容器只限用於≦310VAC (頻率≦100Hz) 或≦630VDC.
2. 電容儲存條件: 溫度: +5 ~ +35℃ 濕度: ≦ 75% RH
   電容儲存時間: 依周期計算有效期: 兩年. (超出兩年產品電氣特性需重新選別及檢查產品外觀)